Boccella Precast, LLC | 324 New Brooklyn Road, Berlin, New Jersey 08009
Phone: (856) 767-3861 Fax: (856) 767-7228 www.boccellaprecast.com

10" CELLA-CORE TECHNICAL DATA SHEET

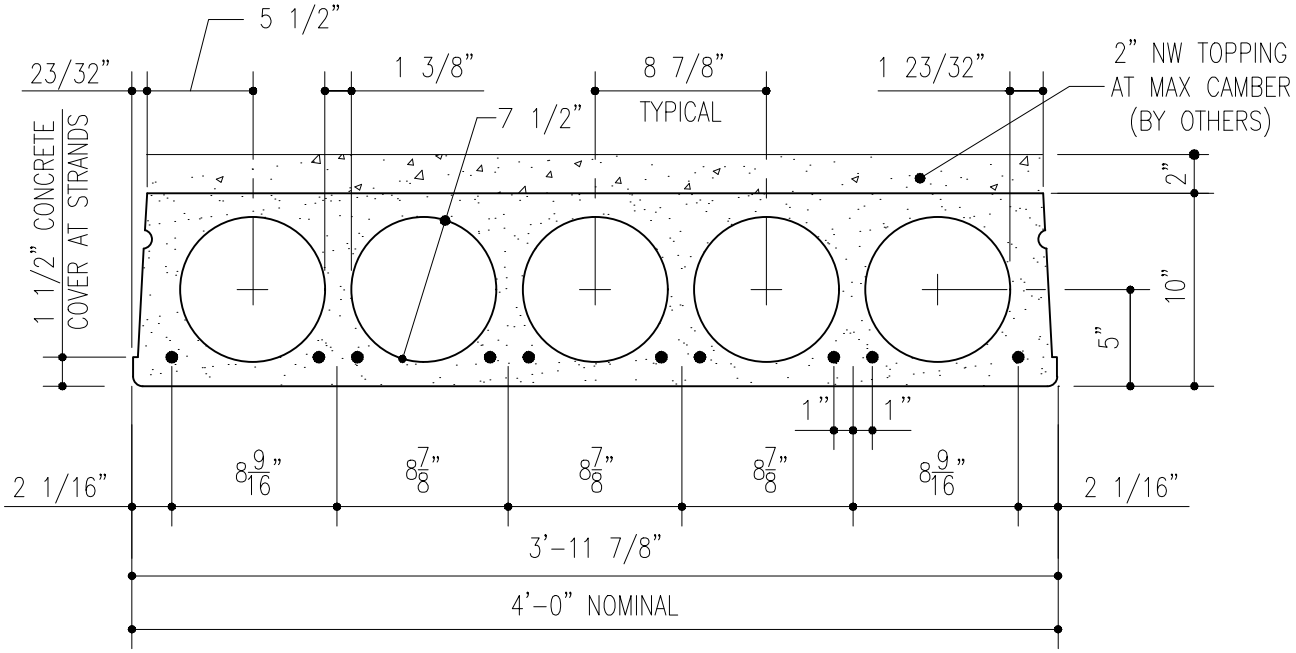

LOAD TABLE OF ALLOWABLE SUPERIMPOSED LOADS IN LBS. PER SQ.FT.

STANDARD WEIGHT 10" CELLA-CORE PLANK + 2" NW CONCRETE COMPOSITE TOPPING

STRAND	STRAND AREA sq. in.	MU K-ft	CLEAR SPAN IN FEET																														
			21	22	23	24	25	26	27	28	29	30	31	32	33	34	35	36	37	38	39	40	41	42	43	44	45	46	47	48	49	50
4-1/2" ø	0.612	120	269	239	213	190	169	151	135	120	107	96	85	76	67	59	52															
6-1/2" ø	0.918	174	269	254	240	227	215	204	194	184	175	167	156	142	130	118	107	98	89	80	73	66	59	53								
8-1/2" ø	1.224	225	269	254	240	227	215	204	194	184	175	167	160	152	146	139	133	128	122	117	112	105	97	89	82	75	68	62	57			
10-1/2" ø	1.530	273	269	254	240	227	215	204	194	184	175	167	160	152	146	139	133	128	122	117	112	108	103	99	95	91	88	84	81	77	71	66

Values below lower heavy line indicate web shear controls.
Values above upper heavy line indicate long-time camber less than zero with no superimposed loads.

MATERIAL PROPERTIES - COMPOSITE MEMBER

Net Area	*313.66 in^2*	*Strength of Concrete (f 'c)*	*6000 psi*
Moment of Inertia	*5153.42 in^4*	*Strength at Release (f 'ci)*	*3500 psi*
Centroid from Slab Bottom	*6.25 in*	*Unit weight of Concrete*	*150 pcf*
Section Modulus, Top	*897.24 in^3*	*Ultimate Steel Strength*	*270 ksi*
Section Modulus, Bottom	*823.71 in^3*	*Strand Jacking Stress*	*202.5 ksi*
Web Width	*9.25 in*	*Strand Type*	*Low Relaxation*
V/S Ratio	*2.28 in*	*Grout Joint Requirements*	*1399 ft^2/ yd^3*
*Self Weight **	*93.9 psf*		

** Self weights based on grouted section with 2" topping*

These tables are for general descriptive purposes only. Actual Cella-Core designs are dependant on local codes and standards, material properties and product end usage. Camber of planks must be considered when establishing finished floor elevations. Failure to do so may cause issues in the field with other constructions.