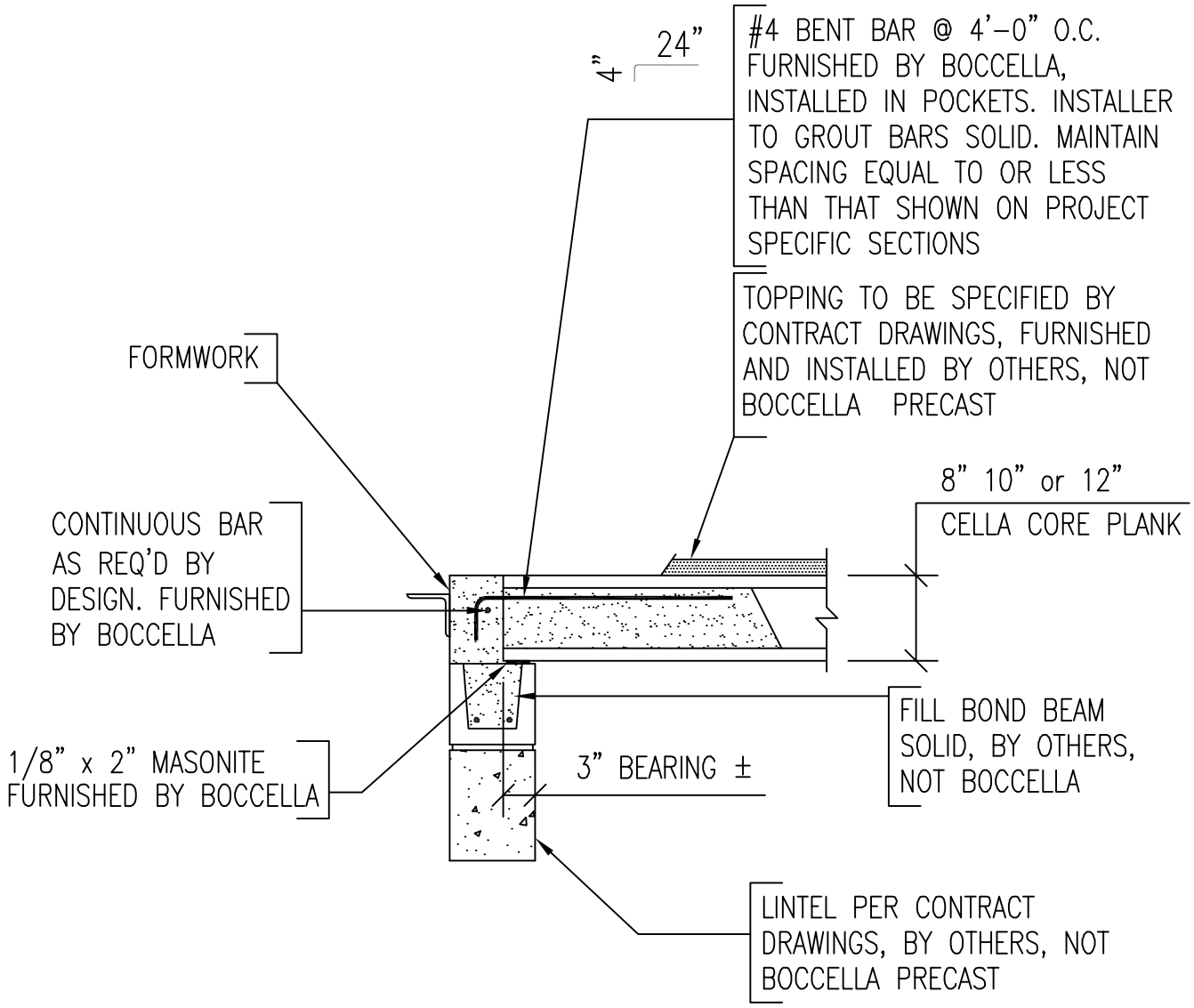

NOTES:

SMOOTH, CLEAN AND LEVEL BEARING SURFACES ARE REQUIRED FOR PROPER PLANK INSTALLATION. WALLS TO BE BE FURNISHED AND INSTALLED BY CUSTOMER OR THEIR GENERAL CONTRACTOR, NOT BOCCELLA. NO WALLS, PIPES, CONDUIT OR OTHER FIXTURES ARE TO EXTEND ABOVE THE PRECAST BEARING SURFACE UNTIL THE PLANKS HAVE BEEN SET INTO THEIR FINAL DESIGNED POSITION.

June 2009

Boccella Precast, LLC
324 New Brooklyn Road
Berlin, New Jersey 08009
Phone: (856) 767-3861 Fax: (856) 767-7228
www.boccellaprecast.com

STANDARD DESIGN CATALOG

DRAWING DESCRIPTION:
TYPICAL END BEARING @ ELEVATOR CMU CONDITION

SCALE: 3/4" = 1'-0"

CATALOG: PAGE 8