Boccella Precast, LLC | 324 New Brooklyn Road, Berlin, NJ 08009
Phone: (856) 767-3861 Fax: (856) 767-7228 www.boccellaprecast.com

6"+T CELLA-CORE TECHNICAL DATA SHEET

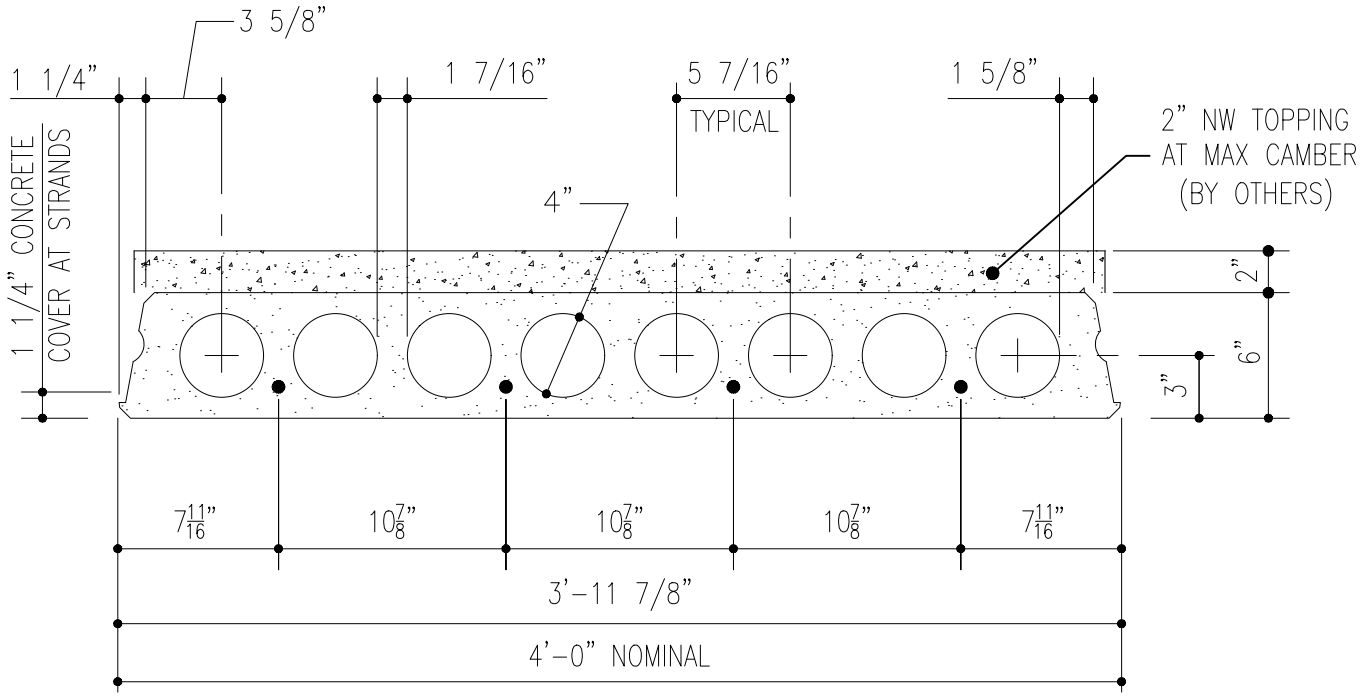

LOAD TABLE OF ALLOWABLE SUPERIMPOSED LOADS IN LBS. PER SQ.FT.

STANDARD WEIGHT 6" CELLA-CORE PLANK + 2" NW CONCRETE COMPOSITE TOPPING

STRAND	STRAND AREA sq. in.	MU K-ft	CLEAR SPAN IN FEET													
			11	12	13	14	15	16	17	18	19	20	21	22	23	24
4-1/2" ø	0.612	74	391	351	318	290	266	245	222	195	172	152	135	121	105	87

Values below lower heavy line indicate web shear controls.
Values are terminated before long term camber is less than +0" with no superimposed loads.

MATERIAL PROPERTIES

Net Area	*263 in^2*	*Strength of Concrete (f 'c)*	*6000 psi*
Moment of Inertia	*1644 in^4*	*Strength at Release (f 'ci)*	*3500 psi*
Centroid from Slab Bottom	*4.13 in*	*Unit weight of Concrete*	*150 pcf*
Section Modulus, Top	*547 in^3*	*Ultimate Steel Strength*	*270 ksi*
Section Modulus, Bottom	*397 in^3*	*Strand Jacking Stress*	*175.5 ksi*
Web Width	*10.0 in*	*Strand Type*	*Low Relaxation*
V/S Ratio	*1.78 in*	*Grout Joint Requirements*	*2276 ft^2/ yd^3*
*Self Weight **	*51+25 = 76 psf*	** Self weights based on grouted section*	

These tables are for general design with uniform loading only. Final design by Boccella engineering will depend on local codes and standards, slab openings, non-uniform loads, and project specific requirements.